VENTO MOTORCYCLES, U.S.A

VENTO 150

DIAGRAMA DEL MOTOR

Importa, garantiza y distribuye CAGIVA

Motor de Argentina S.A.

ESTIMADO CLIENTE

Estamos contentos de tenerlo entre los propietarios de nuestros modelos y le agradecemos por habernos elegido.

Para asegurarles una plena satisfacción en el uso de este cuatriciclo y para obtener cualquier repuesto original que necesite lo invitamos a seguir atentamente las instrucciones de este manual del diagrama del motor de su scooter Vento 150.

Para cada control o reparación diríjase solamente a los agentes autorizados exigiendo si fuese necesario repuestos originales.

Lo saludamos deseándole que disfrute de su nueva adquisición.

CAGIVA MOTOR DE ARGENTINA S.A .
Don Bosco 559 - B1642FDK San Isidro.
Tel 4742-7367 / 4571 / 4707-0067 - Fax 4742-5335,
e-mail: cagiva@infovia.com.ar
www.cagiva.com.ar

CAGIVA MOTOR DE ARGENTINA S.A. se reserva el derecho de aportar en cualquier momento, sin comprometerse a actualizar esta publicación, todas las modificaciones que se crean necesarias.

FIG - 1: CAMSHAFT COMPLETE

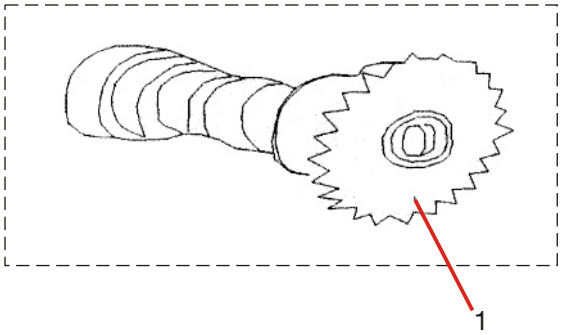

NRO.	CODIGO	DESCRIPCION	CANT.	u$s/UNIT
1	2531079	CAMSHAFT COMP.	1	56,97

FIG - 2: CAMSHAFT HOLDER

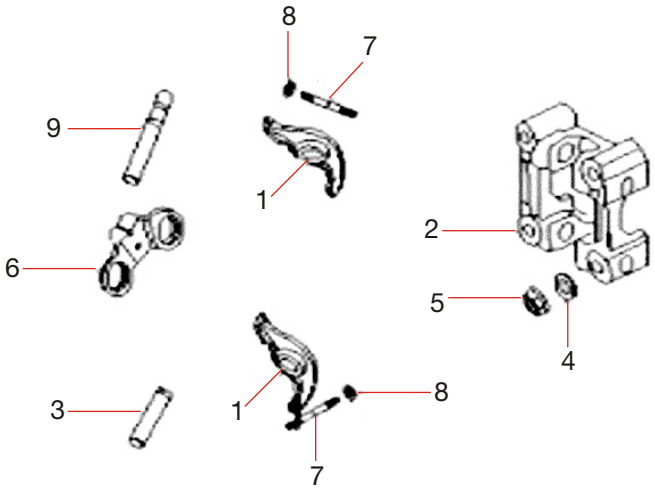

NRO.	CODIGO	DESCRIPCION	CANT.	u$s/UNIT
1	2531011	ARM VALVE ROCKER	2	19,03
2	2531012	HOLDER CAMSHAFT	1	8,57
3	2531010	SHAFT EX ROCKER ARM	1	3,30
4	1309156	WASHER 8MM	4	0,30
5	1309157	NUT FLANGE 8MM	4	0,30
6	2531009	PLATE COMP STOPPER	1	2,08
7	1309155	SCREW TAPPET ADJUSTING	2	0,80
8	1309154	NUT TAPPET ADJUSTING	2	0,80
9	2531008	SHAFT COMP UN ROCKER ARM		

FIG - 3: CARBURETOR

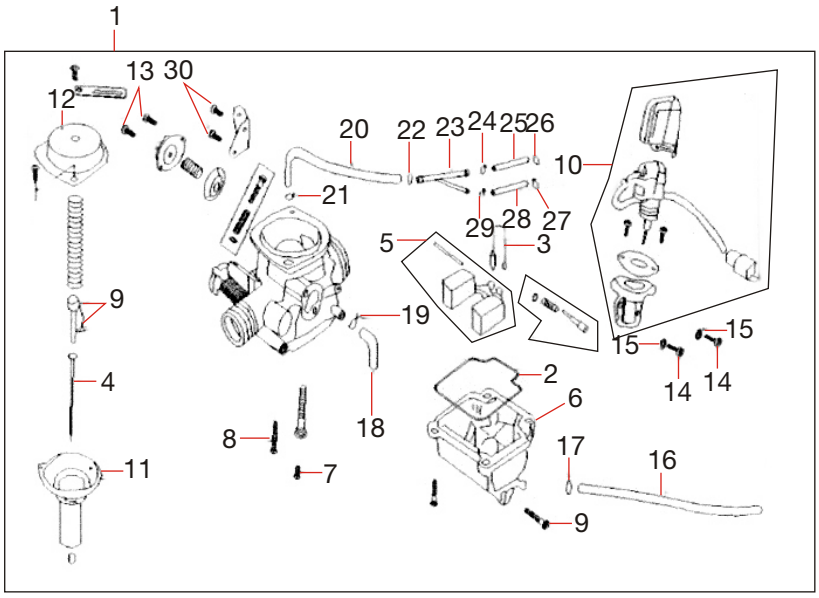

NRO.	CODIGO	DESCRIPCION	CANT.	u$s/UNIT
1	2531508	CARBURETOR ASSY	1	146,00
2	0000	RUBBER SEALING	1	0,80
3	0000	VALVE SET FLOAT	1	34,45
4	0000	NEEDLE JET SET	1	17,90
5	0000	SET FLOAT	1	11,13
6	0000	CHAMBER SET FLOAT	1	3,30
7	0000	MAIN JET	1	4,28
8	0000	IDLING JET	1	12,11
9	0000	DRAIN SCREW	1	0,97
10	0000	AUTO FUEL CHOKE COMP.	1	63,77
11	0000	PISTON COMP VACUUM	1	30,53
12	0000	THROTTLE VALVE CAP	1	5,50
13	1309187K	SCREW M4X8	2	0,25
14	1309190L	SCREW M5	2	0,25
15	1309183M	WASHER	2	0,25
16	1309190N	RUBBER PIPE	1	0,12
17	1309190	CLIP	1	0,12
18	1309183	RUBBER PIPE	1	0,12
20	1309190A	RUBBER PIPE	1	0,12
21	1309190B	CLIP	1	0,12
22	1309190C	CLIP B7	1	0,12

FIG - 3: CARBURETOR

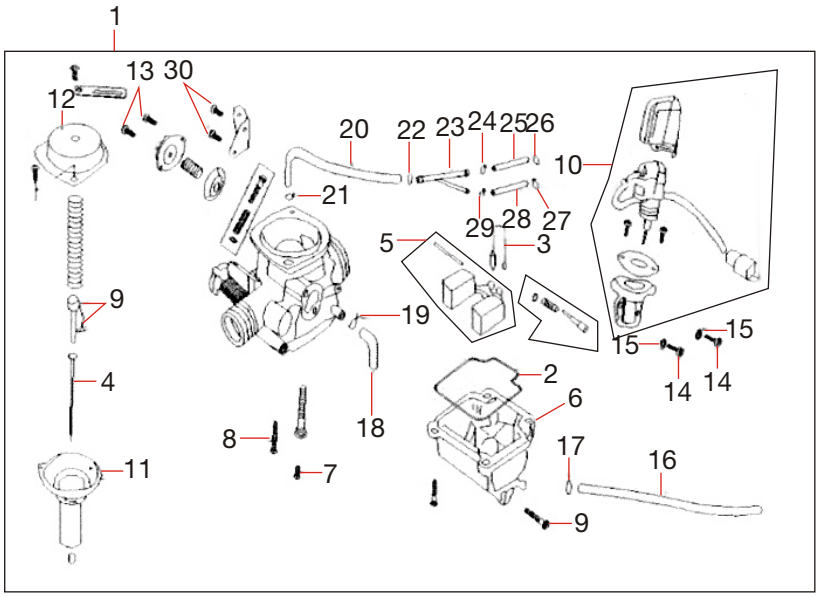

NRO.	CODIGO	DESCRIPCION	CANT.	u$s/UNIT
23	1309190D	JOINT PIPE	1	0,12
24	1309190E	CLIP B7	1	0,12
25	1309190F	RUBBER PIPE	1	0,12
26	1309190G	CLIP B7	1	0,12
27	1309190H	CLIP	1	0,12
28	1309190I	RUBBER PIPE	1	0,12

FIG - 4: CHAIN TENSIONER

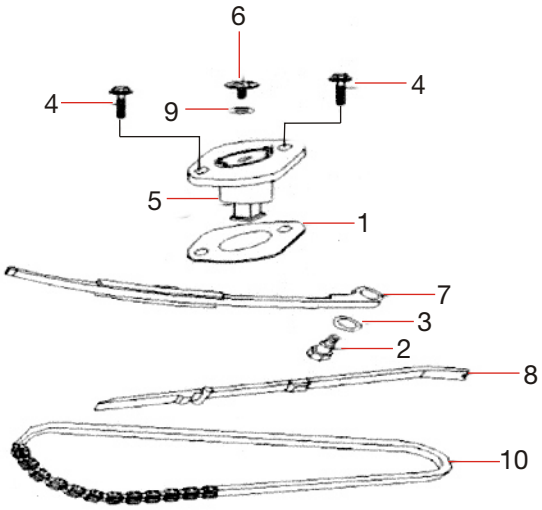

NRO.	CODIGO	DESCRIPCION	CANT.	u$s/UNIT
1	2531535	GASKET TENSIONER LIFTER	1	1,40
2	4080092	CAM CHAIN TENSIONER	1	0,30
3	2531560	O-RING 15.2X1.5	1	0,30
4	4000089	BOLT FLANGE 6X22	2	0,25
5	2531518	CHAIN TENSIONER ASSY.	1	5,80
6	4080097	SCREW PAN	1	0,15
7	2531517	TENSIONER RAIL CHAIN COMP	1	8,81
8	2531519	GUIDE COMP CAM CHAIN	1	10,15
9	2531556	O-RING 10X1.8	1	0,25
10	2531606	CHAIN CAM	1	12,00

FIG - 5: CRANKCASE LH-RH

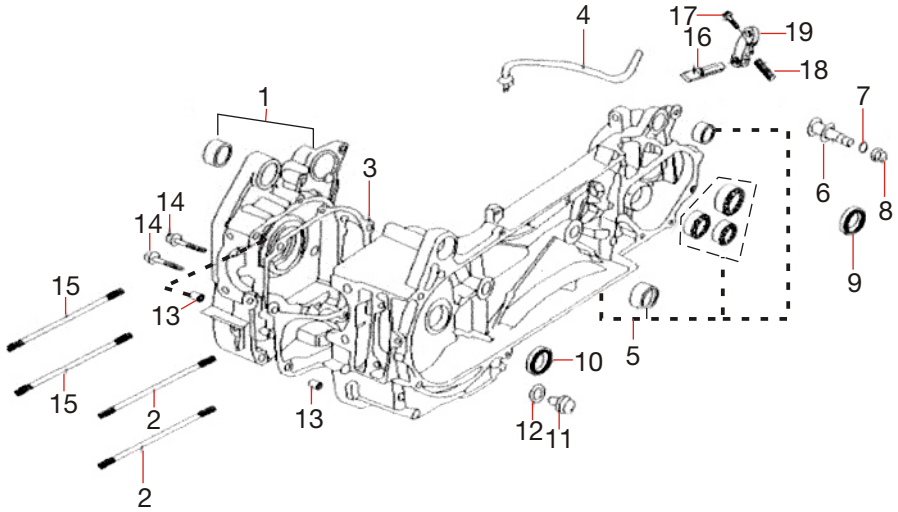

NRO.	CODIGO	DESCRIPCION	CANT.	u$s/UNIT
1	1309285	CRANKCASE ASSY RIGHT	1	62,36
2	4080085	BOLT STUD 8X187	2	4,71
3	2531533	GASKET CRANKCASE	1	0,98
4	2531545	TUBE BREATHER	1	3,30
5	1309284	CRANKCASE ASSY LEFT	1	209,30
6	2531067	PIN BRAKE SHOE ANCHOR	1	2,50
7	2531559	O-RING 7.5X1.5	1	0,25
8	4070042	NUT FLANGE M8	1	0,80
9	2531562	OIL SEAL 27X42X7	1	1,22
10	2531605	OIL SEAL 19.8X30X5	1	4,96
11	1309282	BOLT DRAIN PLUG 12MM	1	1,40
12	1309283	WASHER DRAIN PLUG 12MM	1	0,80
13	2531044	PIN DOWEL 8X14	2	1,40
14	4000097	BOLT FLANGE 6X50	2	0,80
15	4080084	BOLT STUD 8X195	2	4,71
16	4080084AA	BRAKE CAM	1	0,80
17	4080084AB	FLANGE BOLT	1	0,30
18	4080084AC	BRAKE CAM LEVER	1	5,07
19	4080084AD	SPRING	1	1,41

FIG - 6: CRANKSHAFT

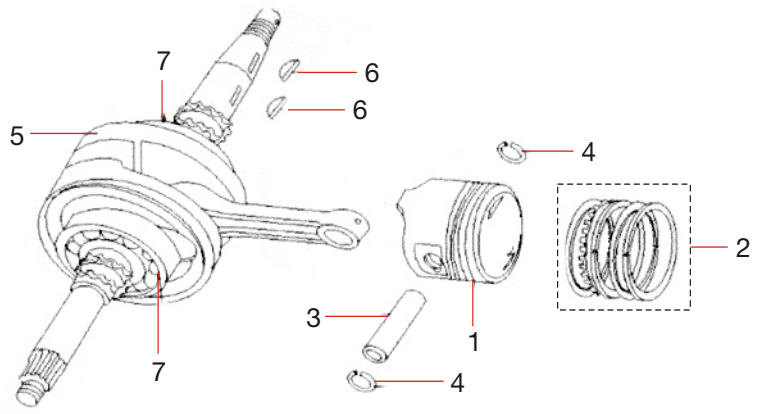

NRO.	CODIGO	DESCRIPCION	CANT.	u$s/UNIT
1	2531501	PISTON	1	21,90
2	1309257	PISTON RING SET	1	27,50
3	2531575	PIN PISTON	1	2,87
4	2531540	CLIP PISTON PIN 15MM	2	0,30
5	2531029	CRANK SHAFT COMP	1	80,00
6	1309263	KEY WOODRUFF	2	5,50
7	1309263AZ	BEARING	2	19,95

FIG - 7: CYLINDER

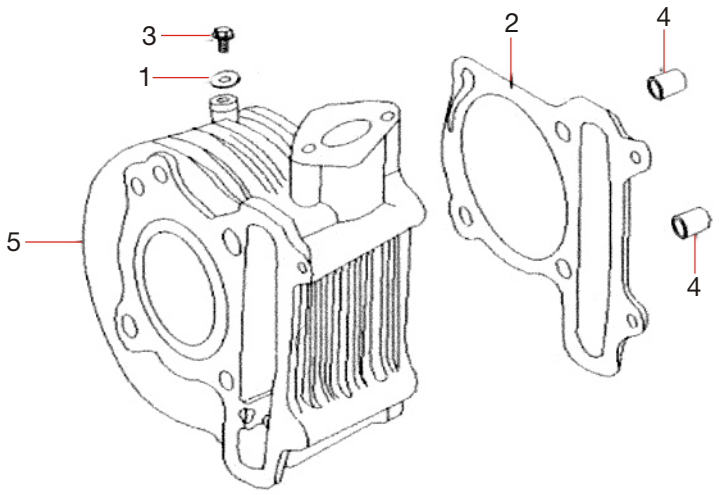

NRO.	CODIGO	DESCRIPCION	CANT.	u$s/UNIT
1	1309254	WAHSER SEALING 6.5MM	1	0,43
2	2531531	GASKET CYLINDER	1	1,40
3	4000D84	BOLT FLANGE 6X12	1	0,30
4	2531017	PIN DOWEL 10X16	2	0,80
5	2531028	CYLINDER COMP	1	54,65

FIG - 8: CYLINDER HEAD

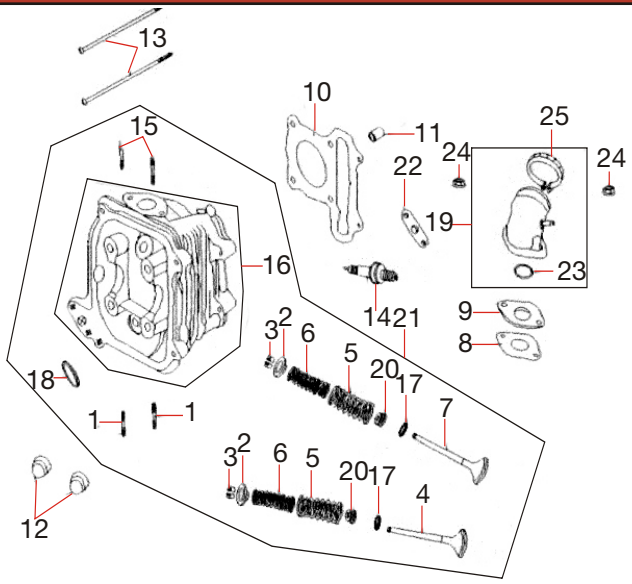

NRO.	CODIGO	DESCRIPCION	CANT.	u$s/UNIT
1	1309158	BOLT 2 STUD 6X35	2	4,40
2	2531014	RETAINER VALVE SPRING	2	3,85
3	2531077	COTTER VALVE	4	6,73
4	2531576	VALVE EX	1	4,40
5	2531538	SPRING VALVE OUTER	2	3,30
6	2531539	SPRING VALVE INNER	2	2,75
7	2531577	VALVE IN	1	5,50
8	2531527	GASKET CARBURETOR INSULATOR	1	6,91
9	2531015	INSULATOR CARBURETOR	1	7,46
10	2531016	GASKET CYLINDER HEAD	1	6,18
11	2531017	PIN DOWEL 10X16	4	0,80
12	4080100	NUT CAP 6MM	2	4,40
14	2531587	SPARK PLUG, NGK CR7HSA	1	15,97
15	4060010	BOLT 2STUD 6X50	2	2,75
16	2531013	HEAD COMP CYLINDER	1	91,18
16	2531013JP	HEAD COMP CYLINDER(EPA)	1	91,18
17	2531547	GASKET EX VALVE	2	6,85
18	1309164	SEAL VALVE STEM	2	4,16
19	2531548	INTAKE PIPE COMP.	1	12,12
19	2531548L	INTAKE PIPE COMP.(EPA)	1	12,12
20	4080077	SEAT VALVE SPRING OUTER	2	4,71

FIG - 8: CYLINDER HEAD

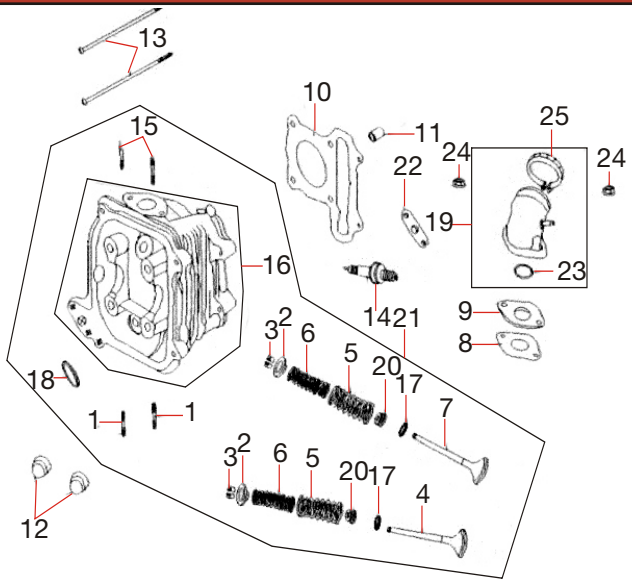

NRO.	CODIGO	DESCRIPCION	CANT.	u$s/UNIT
21	2531013P	HEAD COMP CYLINDER ASSY	1	131,51
21	2531014PP	HEAD COMP CYLINDER ASSY (EPA)	1	131,51
22	2531015PQ	HIGH TEMPERATURE GASKET(EPA)	1	7,47
23	2531016AQ	O-RING INTAKE MANIFOLD	1	2,20
24	2531017BQ	WAHSER	2	4,40
25	2531018CQ	CLAMP INTAKE MANIFOLD1	1	4,40

FIG - 9: CYLINDER HEAD COVER

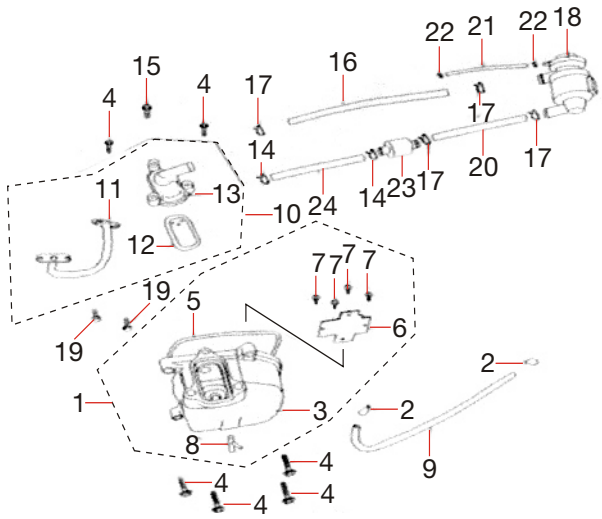

NRO.	CODIGO	DESCRIPCION	CANT.	u$s/UNIT
1	12300-F101-0000	CYLINDER HEAD COVER COMP.(EPA)	1	37,57
1	2531001	CYLINDER HEAD COVER COMP.	1	22,00
2	30719VE1F910	CLIP B 12MM	2	0,43
3	0000	COVER(EPA)	1	27,50
4	B01070602563	BOLT FLANGE M6X25	6	0,12
5	0000	GASKET HEAD COVER(EPA)	1	5,81
5	2531546	GASKET HEAD COVER	1	5,81
6	0000	PLATE HEAD COVER(EPA)	1	3,73
7	V845VE1F090	SELF-TAPPING SCREW ST4.2X6.5	4	0,42
8	1232AVE1F090	JOINT ASSY	1	0,25
9	30110VE1F000	TUBE BREATHER	1	2,08
10	18500-F101-0000	PIPE, AIR SUCTION COMP.(EPA)	1	31,39
11	0000	PIPE, AIR SUCTION(EPA)	1	16,52
12	0000	GASKET(EPA)	1	8,81
13	18521-F101-0000	COVER ONE - WAY AIR VALVE(EPA)	1	6,05
14	0000	CLIP-II(EPA)	2	0,43
15	0000	BOLT M6X37(EPA)	1	0,12
16	0000	(400MM)(EPA)	1	27,54
17	0000	CLIP-I(EPA)	4	0,86
18	0000	CONTROL VALVE COMP(EPA)	1	31,39
19	GB5787-86	BOLT M6X16(EPA)	2	0,25

FIG - 9: CYLINDER HEAD COVER

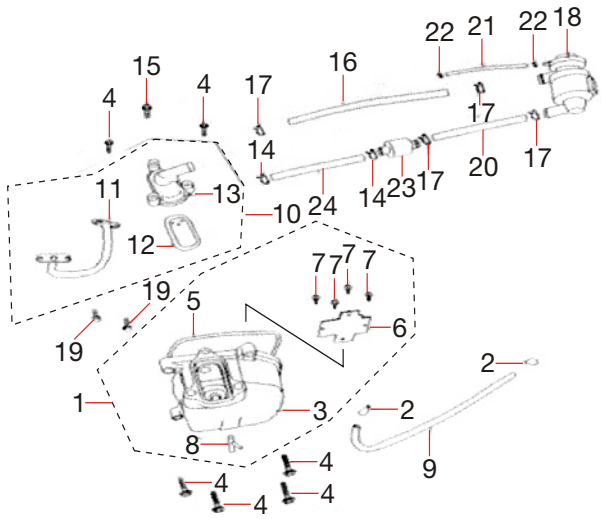

NRO.	CODIGO	DESCRIPCION	CANT.	u$s/UNIT
20	0000	INTAKE RUBBER PIPE-I(EPA)	2	0,43
21	0000	HOSE	1	2,75
22	0000	CLAMP TUBE, F8.5	2	0,80
23	0000	FILTER, INTAKE	1	14,87
24	0000	INTAKE RUBBER PIPE, II	1	0,43

FIG - 10: DRIVE PULLEY

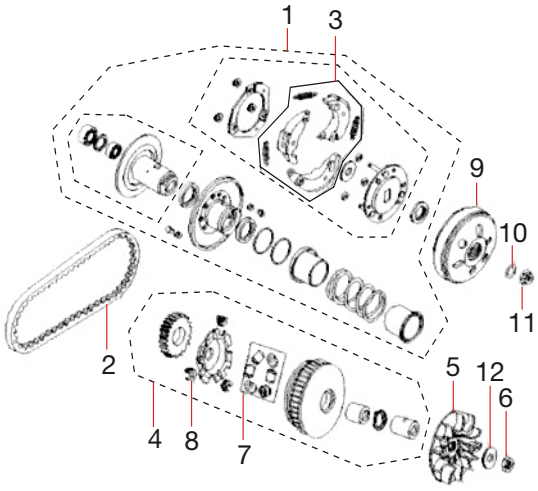

NRO.	CODIGO	DESCRIPCION	CANT.	u$s/UNIT
1	1309236	CLUTCH ASSY	1	72,70
2	2531579	BELT DRIVE,	1	52,32
3	1309238	CLUTCH SHOES (SET OF THREE)	1	58,50
4	1309223	VARIATOR ASSY.	1	27,29
5	1309217	FIXED FACE, DRIVE PULLEY	1	13,64
6	407003A	NUT FLANGE 12X1.25MM	1	1,22
7	1309221	ROLLER SET WIEGHT (6)	6	2,32
8	1309219	PLATE RAMP	1	14,44
9	1309243	CLUTCH DRUM	1	31,51
10	4080099	WASHER PLAIN 12MM	2	1,22
11	407003B	NUT FLANGE 12X1.25MM	1	1,22
12	407004C	WASHER 14.2X29X2.5	1	0,55

FIG - 11: FAN COVER

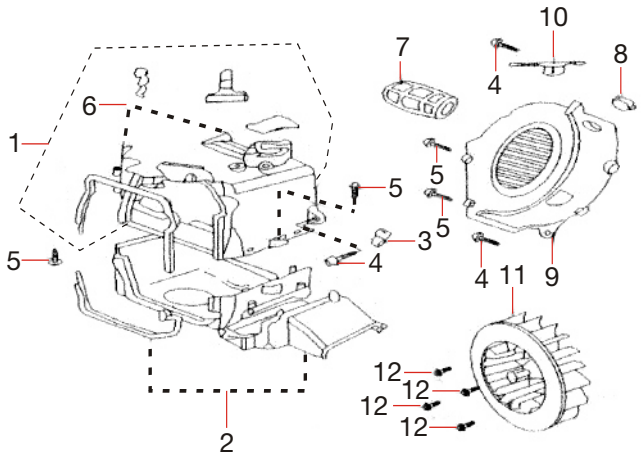

NRO.	CODIGO	DESCRIPCION	CANT.	u$s/UNIT
1	2531030	ENGINE SHROUD COMP	1	3,42
2	1309264	DUCT SHROUD COMP	1	3,30
3	2531033	CLAMP CARB DRAIN TUBE	1	1,10
4	4000090	BOLT FLANGE 6X25	3	0,70
5	4010086	SCREW TAPPING ST4.8X16	2	0,12
6	2531031	ENGINE SHROUD	1	2,87
7	2531551	DUCT CARBURETOR COOLING	1	1,40
8	2531552	GROMMET SIDE PANEL	1	0,43
9	2531034	COVER COMP FAN	1	3,85
10	2531581	CLAMP STARTER CABLE	1	1,10
11	2531035	COMP COOLING	1	4,40

FIG - 12: KICK STARTER

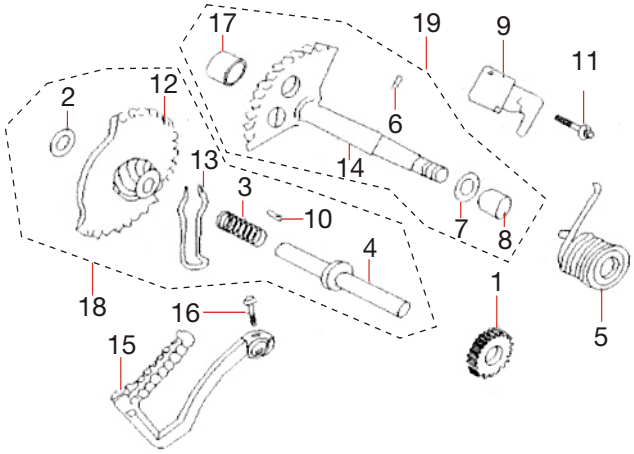

NRO.	CODIGO	DESCRIPCION	CANT.	u$s/UNIT
1	2531054	GEAR KICK DRIVEN	1	8,38
2	1309299	WASHER	1	0,55
3	1309300	SPRING STARTER IDLE	1	2,20
4	1309301	SHAFT STARTER IDLE	1	6,60
5	2531543	SPRING KICK STARTER	1	1,89
6	1309302	PIN SPECIAL	1	0,25
7	1309303	WASHER 14MM	1	0,30
8	1309304	BUSH KICK SPINDLE II	1	0,67
9	2531055	PLATE KICK RETURN STOPPER	1	0,98
10	1309305	ROLLER 3X8.5	1	0,12
11	400009A	BOLT FLANGE 6X16	1	0,30
12	2531058	GEAR COMP STARTER IDLE	1	16,80
13	2531542	SPRING STARTER GEAR FRICTION	1	0,86
14	2531059	SPINDLE KICK STARTER	1	16,40
15	2531056	KICK STARTER ARM COMP	1	16,40
16	1309306	BOLT FLANGE 6X22	1	0,30
17	1309306U	BUSH KICK SPINDLE	1	0,70
18	1309306T	GEAR KICK STARTER	1	27,23
19	1309306I	SPINDLE COMP KICK STARTER	1	18,30

FIG - 13: LEFT CRANKCASE COVER

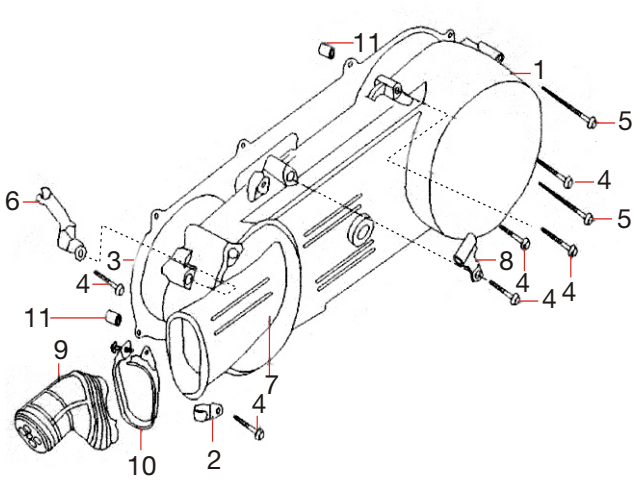

NRO.	CODIGO	DESCRIPCION	CANT.	u$s/UNIT
1	1309199	COVER LEFT CRANKCASE (PHANTOM R41/PHANTERA)	1	89,22
1	1309199AAB	COVER LEFT CRANKCASE (BKM XEIDON)	1	89,22
1	1309199C	COVER LEFT CRANKCASE (PHANTOM GTS/PHANTERA Gt5)	1	89,22
2	2531022	CLAMPER BREATHER DRAIN TUBE	1	2,63
3	2531529	GASKET LEFT COVER	1	2,75
4	4000095	BOLT FLANGE 6X40	6	1,22
5	4000098	BOLT FLANGE 6X65	2	1,22
6	2531024	CLAMP THROTTLE CABLE	1	4,16
7	2531070	BREATHER COVER COMP	1	1,10
8	2531020	CLAMP BRAKE CABLE	1	1,40
9	0	PIPE, AIR INTAKE	1	4,16
10	0	CLAMP COMP.	1	2,75
11	2531020J	DEWEL PIN	2	0,80

FIG - 14: MAGNETO

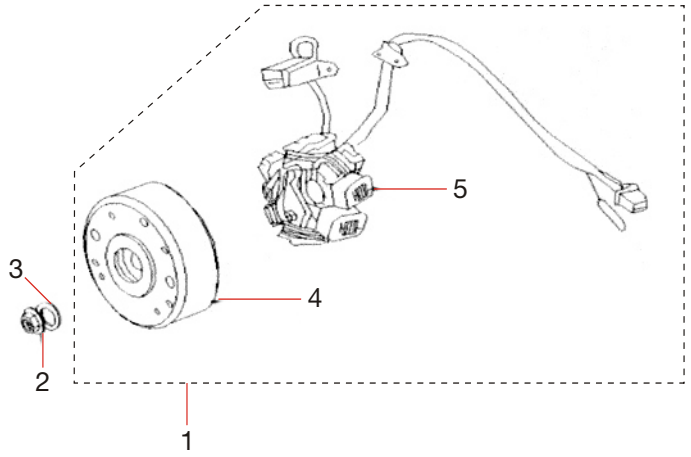

NRO.	CODIGO	DESCRIPCION	CANT.	u$s/UNIT
1	2531582	MAGNETO ASSY AC	1	58,60
2	130967	NUT FLANGE 12X1.25	1	1,25
3	1309268	WASHER PLAIN 12MM	1	0,70
4	1309268H	FLY WHEEL COMP	1	31,50
5	1309268J	STATOR COMP.	1	27,10

FIG - 15: OIL PUMP

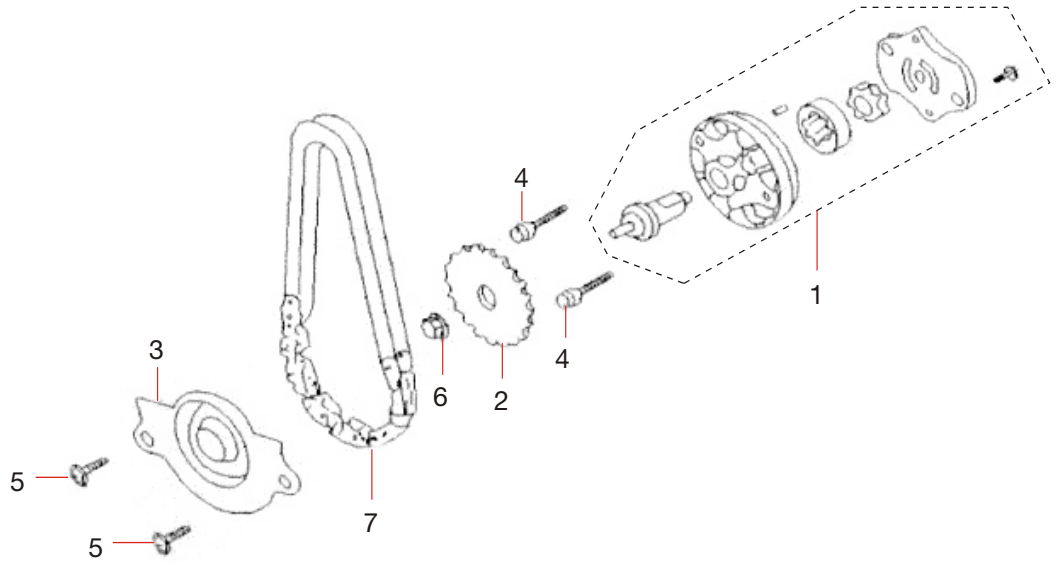

NRO.	CODIGO	DESCRIPCION	CANT.	u$s/UNIT
1	2531051	OIL PUMP COMP	1	15,40
2	2531052	DRIVEN	1	2,75
3	2531053	SEPARATOR OIL	1	1,10
5	4000084	BOLT FLANGE 6X12	2	0,30
6	4070036	NUT FLANGE M6	1	0,30
7	2531515	CHAIN OIL PUMP	1	5,50

FIG - 16: RIGHT CRANKCASE COVER

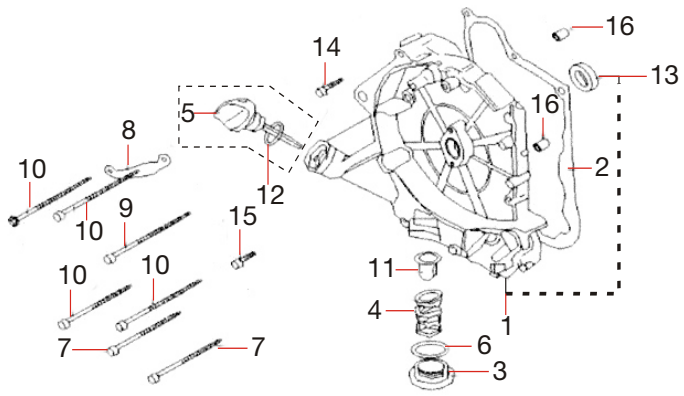

NRO.	CODIGO	DESCRIPCION	CANT.	u$s/UNIT
1	2531038	RIGHT CRANK CASE COVER.	1	32,80
2	2531532	GASKET R CRANKCASE COVER	1	1,41
3	2531039	CAP, OIL DRAIN	1	2,10
4	2531541	SPRING OIL STRAINER	1	1,41
5	2531040	CAP, OIL GAUGE	1	0,85
6	1309280	O-RING	1	0,25
7	1309281	BOLT FLANGE 6X110	2	1,22
8	2531041	CLAMP A.C.GENERATOR CORD	1	0,87
9	4080088	BOLT FLANGE 6X100	1	1,53
10	4080089	BOLT FLANGE 6X95	4	1,53
11	2531553	OIL STRAINER	1	1,41
12	2531557	O-RING 18X3	1	0,31
13	2531605	OIL SEAL 19.8X30X5	1	4,96
14	4000094	BOLT FLANGE 6X35	1	0,80
15	4000093	BOLT FLANGE 6X32	1	0,80
16	4000093AP	DOWEL PIN	2	1,41

FIG - 17: STARTER CLUTCH

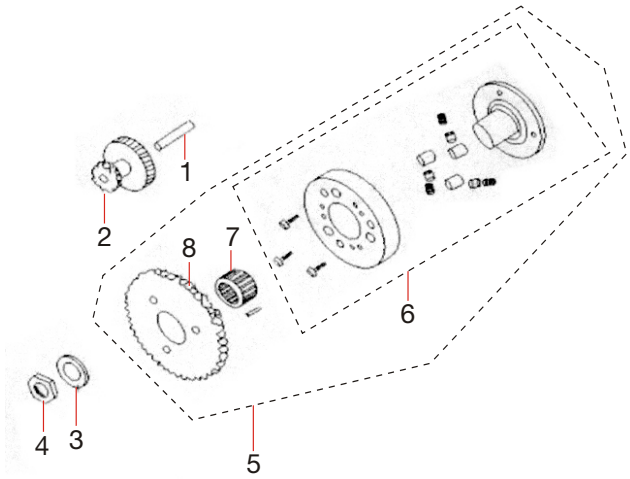

NRO.	CODIGO	DESCRIPCION	CANT.	u$s/UNIT
1	2531036	SHAFT STARTER REDUCTION GEAR	1	2,75
2	2531037	GEAR STARTER REDUCTION	1	15,55
3	1309269	WASHER THRUST	1	0,70
4	1309270	NUT LOCK	1	1,00
5	13092711	CLUTCH ASSY.	1	82,40
6	1309272	SINGLE CLUTCH ASSY.	1	55,24
7	1309279	BEARING NEEDLE 28X32X17	2	20,21
8	1309278	GEAR COMP STARTING CLUTCH	1	13,14

FIG - 18: STARTING MOTOR

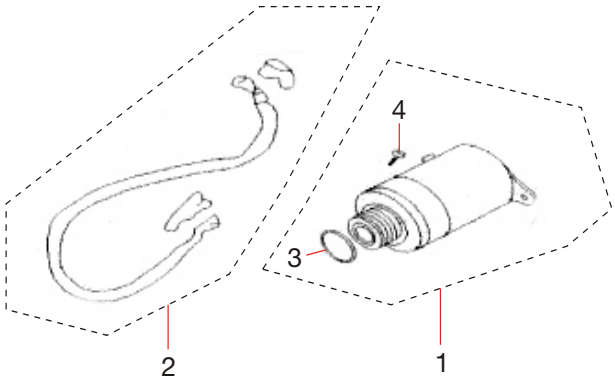

NRO.	CODIGO	DESCRIPCION	CANT.	u$s/UNIT
1	2531507	MOTOR ASSY STARTER, COMP.	1	53,70
2	1309196	CABLE STARTER	1	3,10
3	1309197	O-RING 24.4X3.1	1	2,48
4	1309198	SCREW-WASHER 5X8	1	0,12

FIG - 19: TRANSMISSION

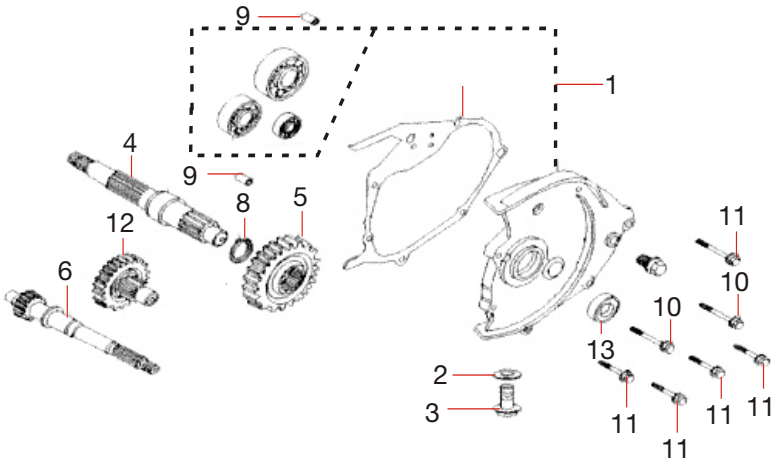

NRO.	CODIGO	DESCRIPCION	CANT.	u$s/UNIT
1	2531046	ASSY	1	61,38
2	4080081	WASHER 8MM	2	0,31
3	1309286	BOLT DRAIN PLUG	2	0,25
4	2531047	SHAFT, OUT PUT	1	35,71
5	2531048	GEAR FINAL	1	16,74
6	2531049	SHAFT DRIVE	1	25,66
7	2531534	GASKET TRANSMISSION COVER	1	1,24
8	1309287	CIR CLIP EXTERNAL 20MM	1	0,31
9	1309287AD	PIN 92401-08014	2	0,25
11	4000091	BOLT FLANGE 6X28	5	0,31
12	2531050	SHAFT COMP COUNTER	1	27,90
13	2531563	OIL SEAL 20X32X16	1	1,00